Model SB401

- Capacity: 0.25 t...10 t
- Material: alloy steel
- Protection class: IP67
- Application: Floor scales, truck scales and other electronic weighing devices.

Performance Specifications

Parameter	Value		Units
Capacity	0.25, 0.5, 1, 1.5, 2, 2.5, 3, 5, 7.5, 10		t
Rated Sensitivity	3.0±0.04		mV/V
Accuracy Class	C2	C3	
Combined Error	±0.03	±0.02	%FS
Temp. Coeff - Zero	±0.030	±0.020	%FS/10°C
Temp. Coeff - Span	±0.016	±0.016	%FS/10°C
Creep(30min.)	±0.024	±0.016	%FS
Zero Balance	1		%FS
Input Resistance	365±5		Ω
Output Resistance	350±3		Ω
Insulation Resistance	⩾5000		MΩ@50Vdc
Operating Temperature Range	-20 to +55		°C
Compensated Temperature Range	-10 to +40		°C
Excitation Voltage	5 to 12		Vdc
Safe Overload	120		%FS
Ultimate Overload	150		%FS
Body Material	alloy steel		mm
Environment Protection	IP66		
Cable Specification	Ø5.7mm cable, L=3m		

Dimensions (in mm)

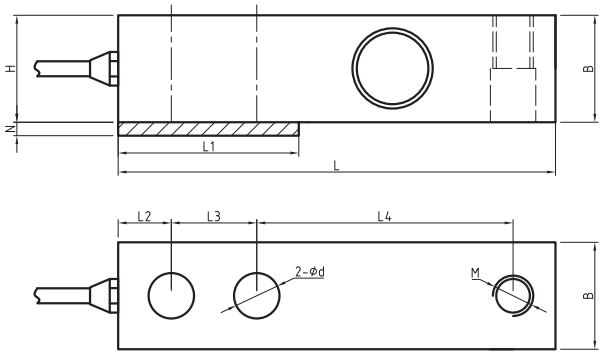

capacity(t)	L	L1	L2	L3	L4	d	B	M	N
0.5-2t	130	57	15.7	25.4	76.2	13.5	31.8	M12x1.75	4
2.5-5t	171.5	76	19	38.1	95.3	19.8	38.1	M20x1.5	6
7.5-10t	222.2	108	25.4	50.8	120.6	26.2	50.8	M24x2	6

Electrical Connection

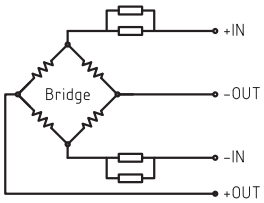

Ordering Information

Model	Capacity	Sensitivity	Combined Error	Electrical interface	Customized Spec's
SB401	0.5t	3.0mV/V	0.03%FS	Ø5.7mm cable, L=3m	

This data sheet contains product specification, properties are not guaranteed. Subject to change without notice.